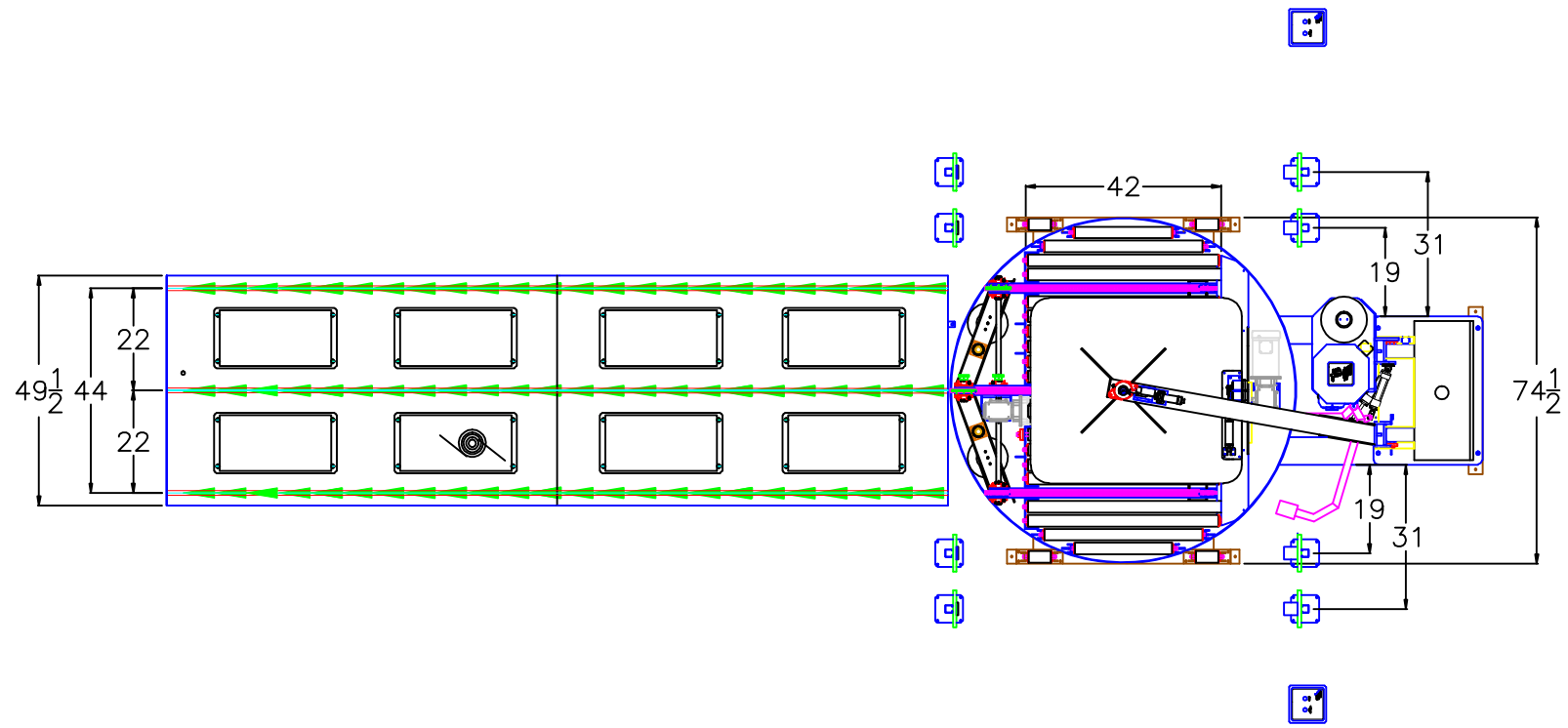
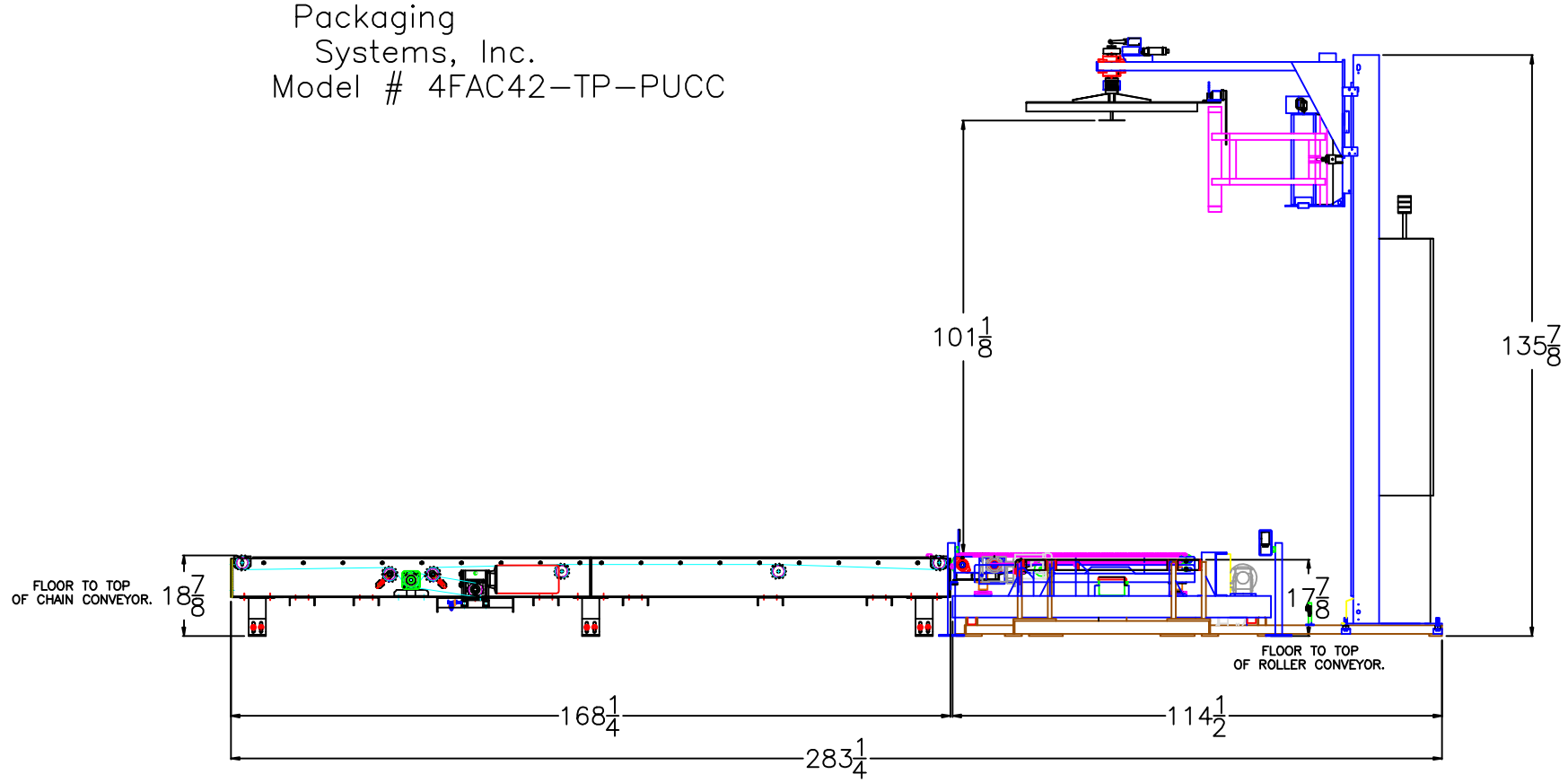
Kalamazoo
Packaging
Systems, Inc.
Model # 4FAC42-TP-PUCC